# THE ULTIMATE SOFTWARE LIBRARY©

## FOR ATARI® COMPUTERS, ATARI® 2600, TI 99/4A™, VIC 20™, AND COMMODORE® 64

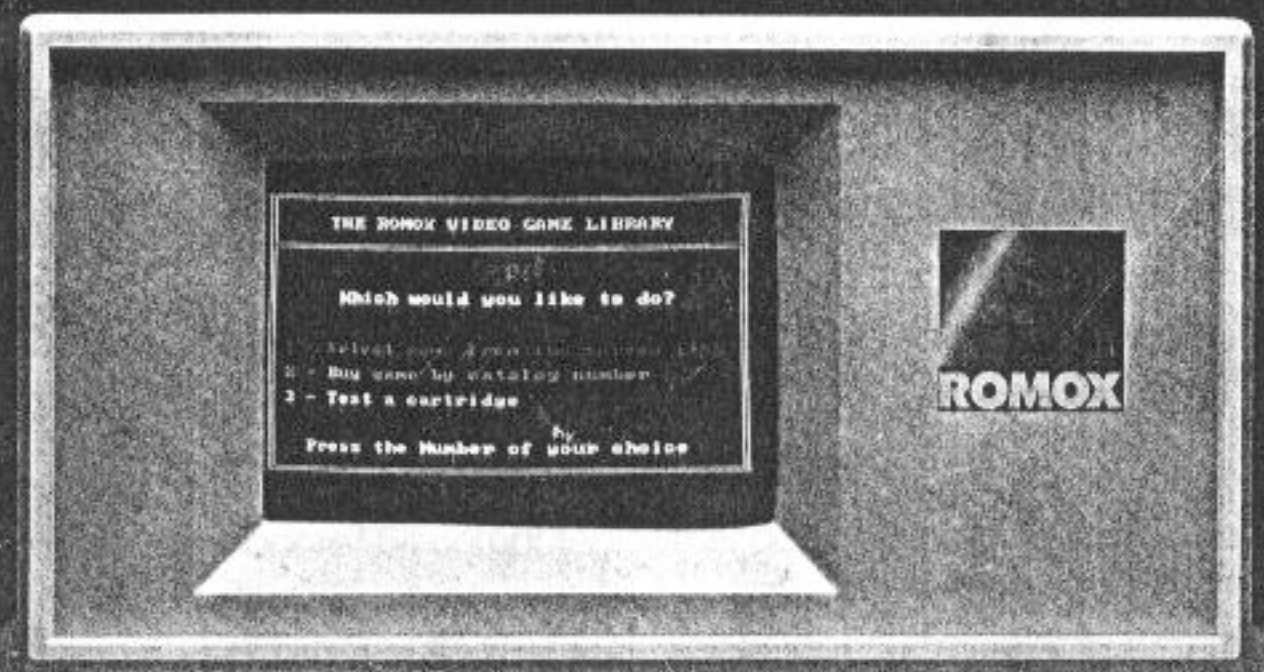

# CATALOG

WINTER 1984 VOL. I

FREE WITH PURCHASE OF A PROGRAM

# THE ULTIMATE SOFTWARE LIBRARY AND REUSABLE CARTRIDGE FROM ROMOX.

The Romox Software Library contains hundreds of popular titles from the leading publishers. Now the software you want is never out of stock. With the Romox Reusable Cartridge you can always come back for the newest hits and latest software.

The Software Library features titles for the Atari® 2600, Atari® Computers, Texas Instruments 99/4A®, Commodore VIC 20®, and Commodore® 64 computers. Other popular computer formats are planned in the near future.

Also, watch for many new educational and home business/management software titles, as well as exciting new game software, over the next few months.

Just imagine – with an endless selection of titles, you'll always get what's hot! Best of all, your Reusable Cartridge can be used over and over again, all at a price you can afford.

# HOW TO USE THE ROMOX SOFTWARE CENTER.

- Press any key to start (watch screen for instructions).
- Select your program from the video screen or directly from this catalog.
- Insert your cartridge into the correct slot and pay the copy fee indicated.
- The clerk will activate the machine to load your cartridge.
- The machine will indicate when your cartridge is ready.

## 1. SOFTWARE CENTER KEYBOARD (TOP VIEW)

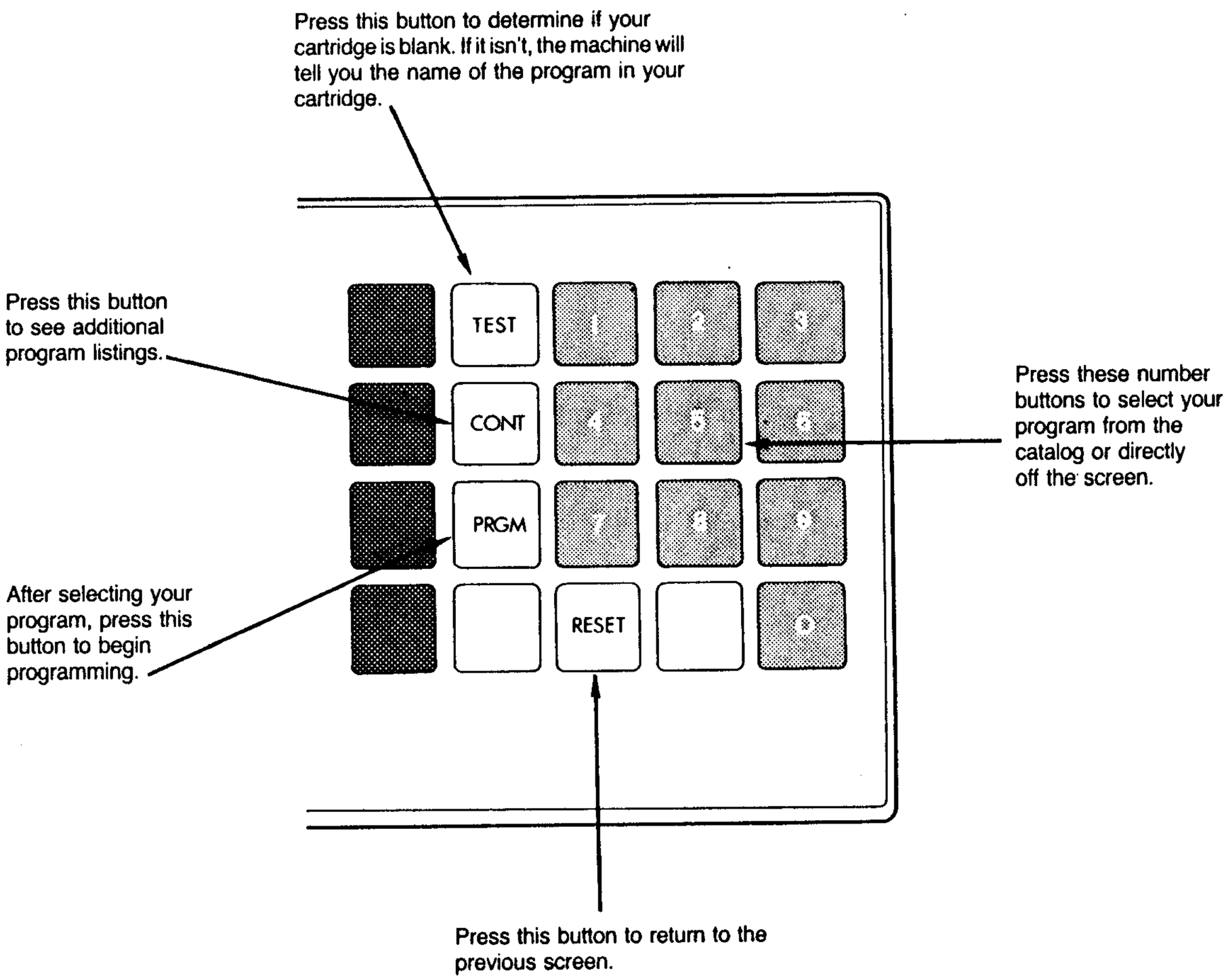

## 2. CARTRIDGE SLOT SELECTION (TOP VIEW)

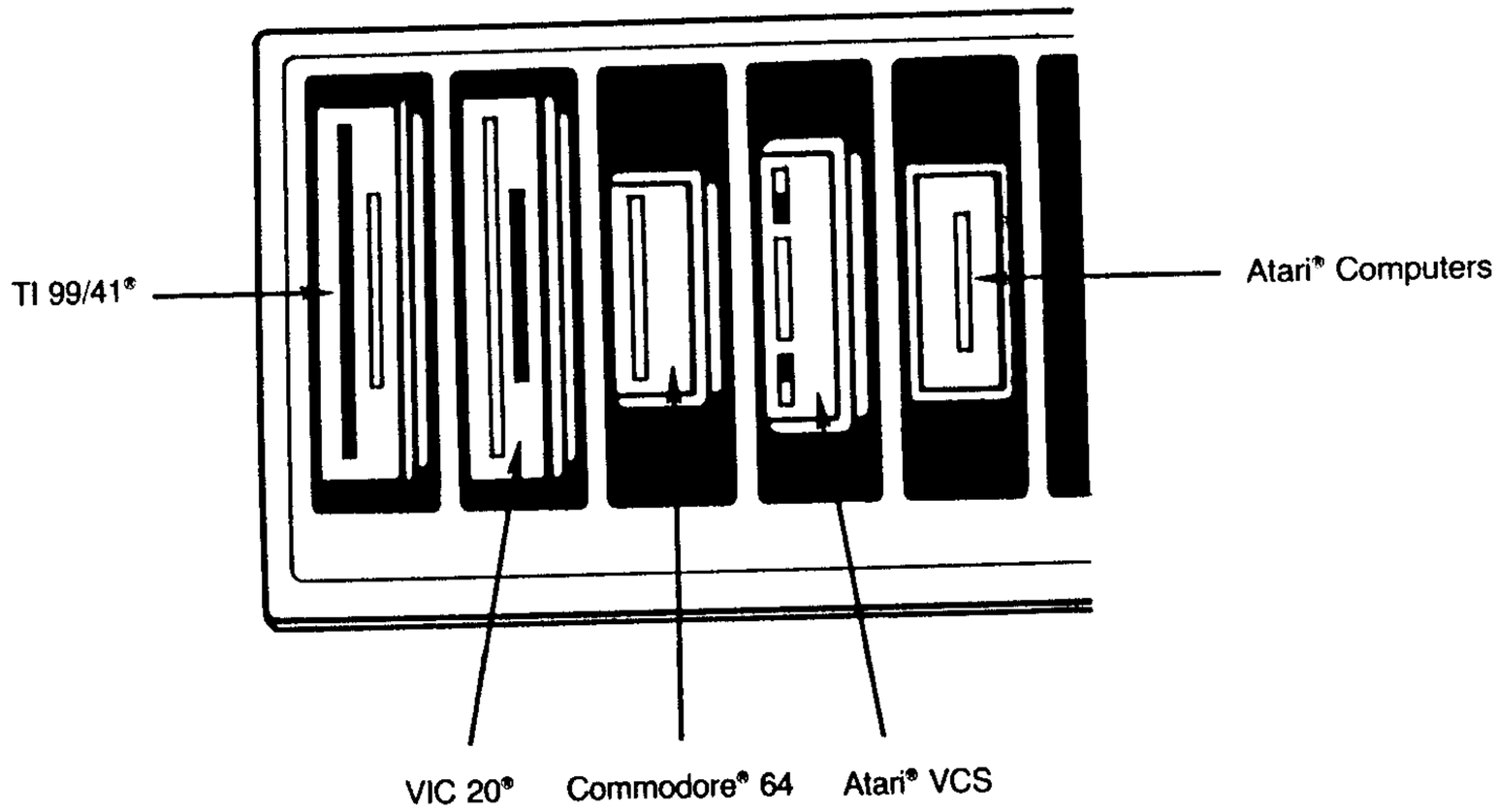


## 3. PROPER CARTRIDGE INSERTION

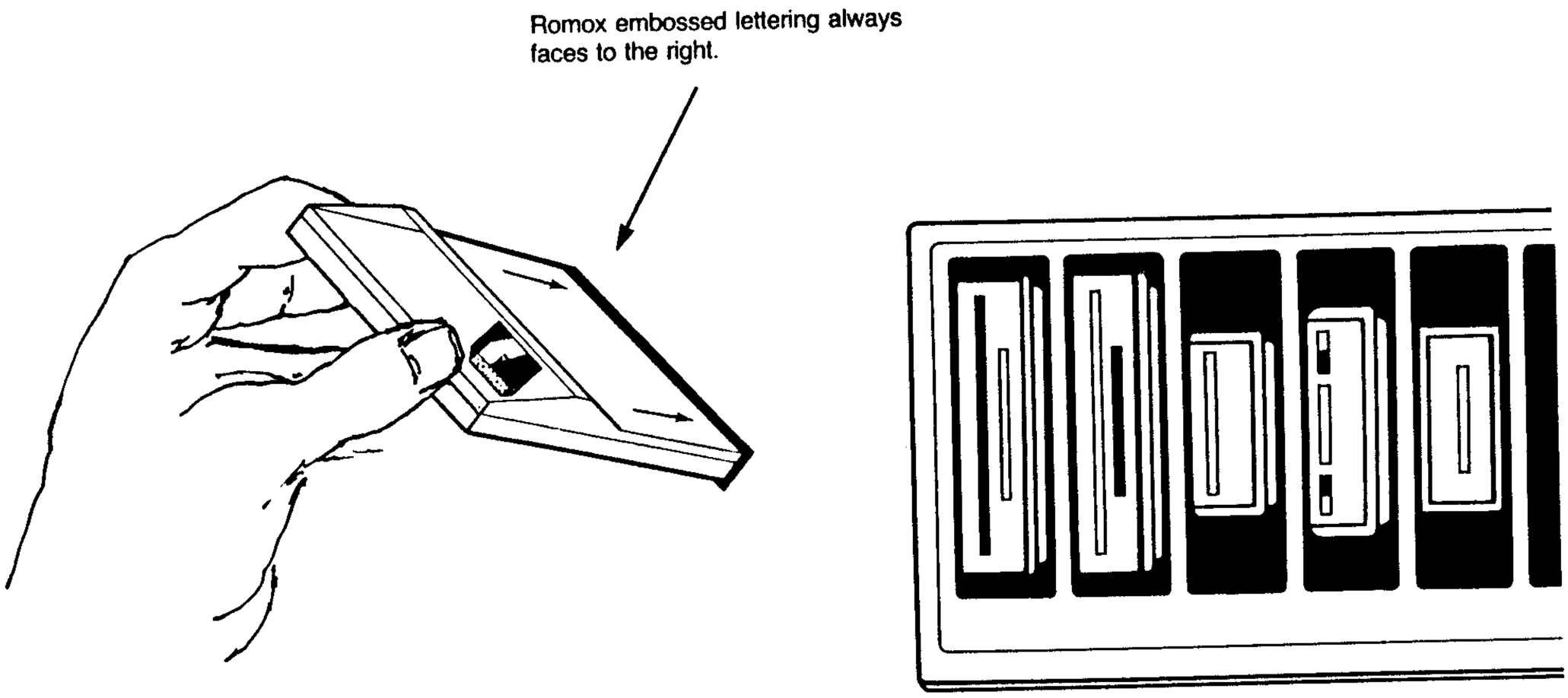

# USE OF THE ROMOX REUSABLE CARTRIDGE WITH YOUR COMPUTER OR VIDEO GAME MACHINE.

Please note that most manufacturers recommend that your system be turned off when inserting or removing cartridges to protect program contents.

Insert your Romox Reusable Cartridge in your system as shown below:

**ATARI® 2600 VCS**

Romox embossed letters facing up and rear.

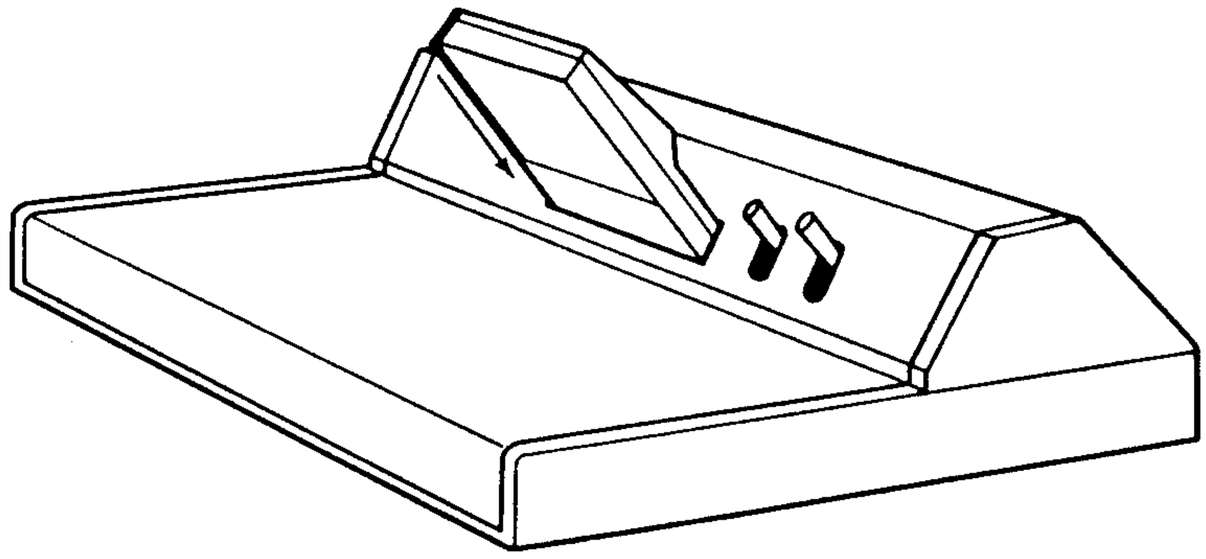

**ATARI® 400/800**

Romox embossed letters away from you.

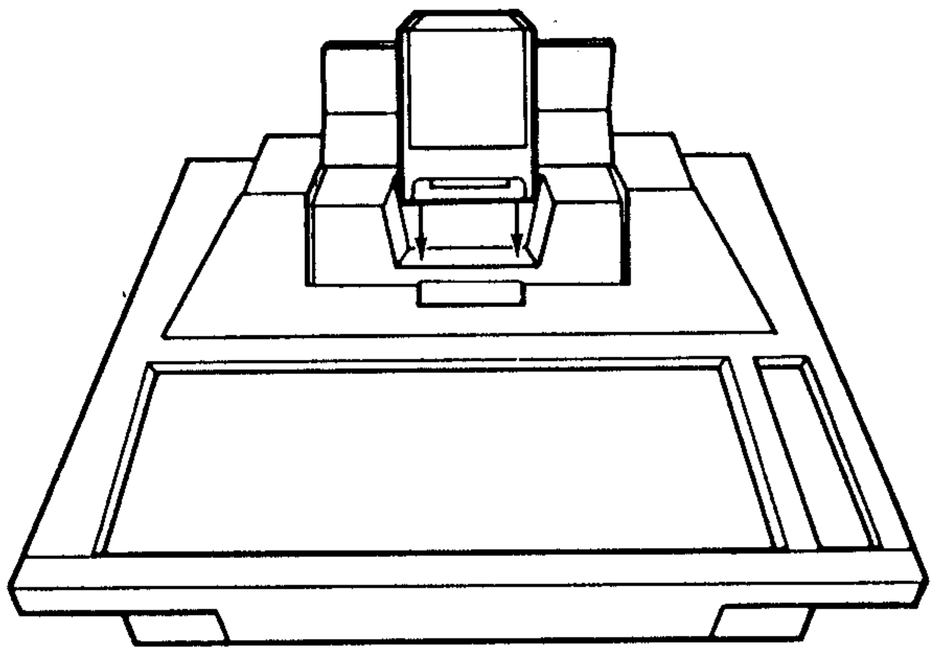

**ATARI® 600/800XL**

Romox embossed letters away from you.

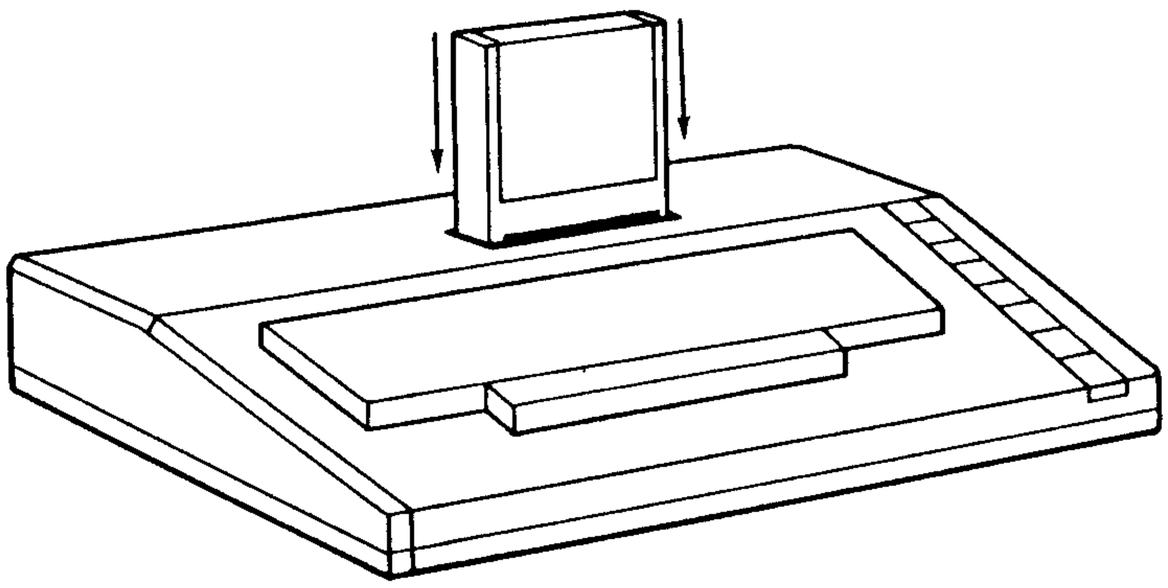

**ATARI® 1200XL**

Romox embossed letters facing down.

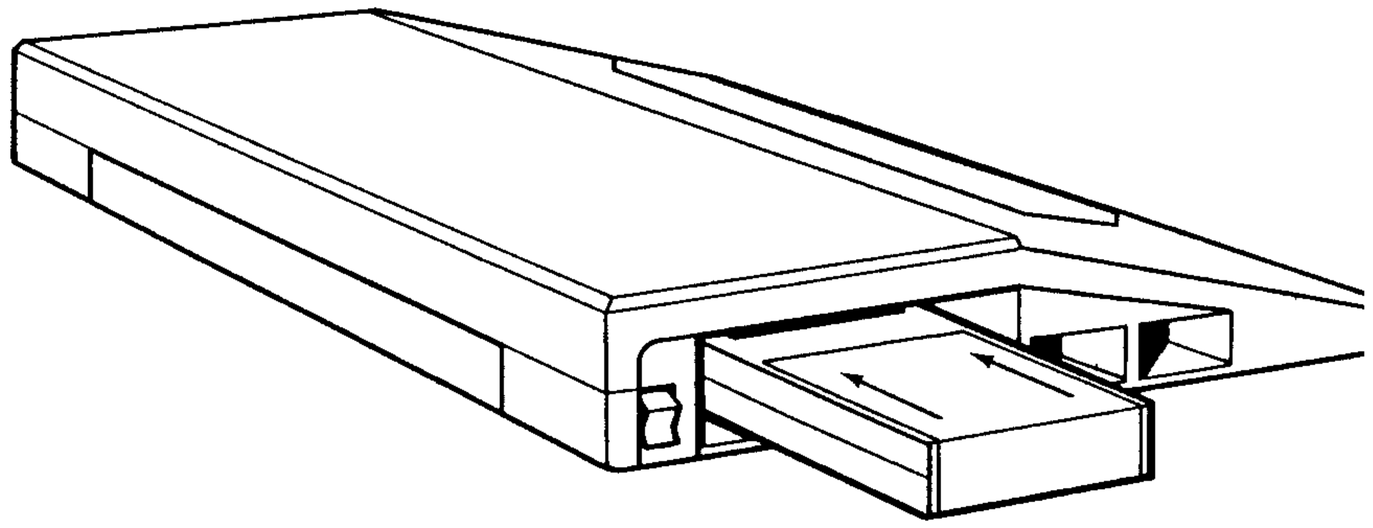

**COMMODORE® 64 AND VIC 20®**

Romox embossed letters facing up.

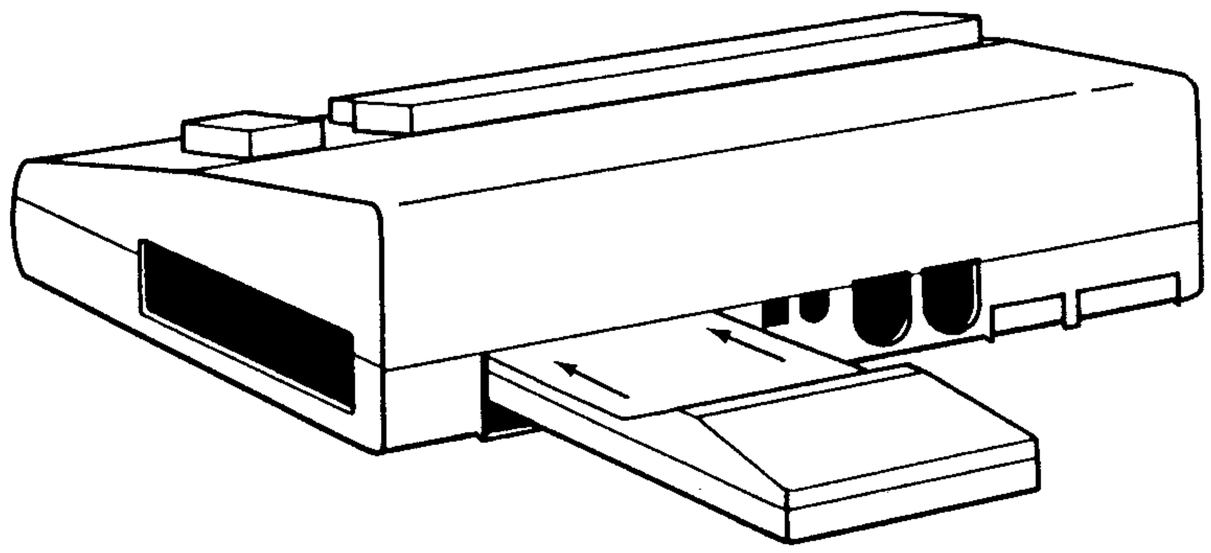

**TI 99/4A®**

Romox embossed letters facing up.

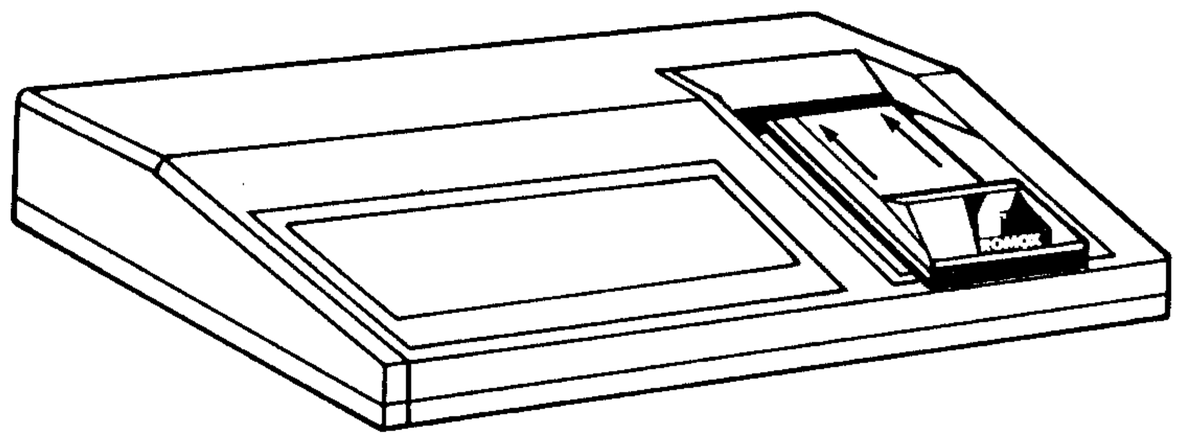

# TABLE OF CONTENTS

## ATARI® 2600 VCS


**23** Air Raiders
**24** Alien
**25** Armor Ambush
**26** Astroblast
**27** Bank Heist
**3** Boing
**15** Cakewalk
**39** Coconuts
**28** Commando Raid
**36** Cosmic Creeps
**20** Cosmic Swarm
**29** Crash Dive
**37** Crypts of Chaos
**30** Dark Cavern
**14** Deadly Duck
**31** Demolition Herby
**33** Eggomania
**5** Fantastic Voyage
**6** Fast Eddie
**34** Fast Food
**7** Flash Gordon
**41** Frogs and Flies
**43** Gopher Attack
**42** Guardians of Treasure
**44** International Soccer
**8** Lock'n'Chase
**35** M*A*S*H
**40** Megaforce
**22** Mines of Minos
**9** Mogul Maniac
**4** Off Your Rocker
**21** Porky's
**45** Revenge of the Beefsteak Tomatoes
**52** Ram It
**16** Room of Doom
**39** Sneak'n'Peek
**49** Space Attack
**32** Space Jockey
**11** Space Master X-7
**46** Squeeze Box
**48** Stargunner
**10** Star Strike
**17** Stronghold
**50** Super Challenge Baseball
**47** Super Challenge Football
**12** The Earth Dies Screaming
**19** Turmoil
**51** Word Zapper
**13** Worm War I


## ATARI® COMPUTERS


**73** Alien Garden
**71** Alpha Shield
**75** Anteater
**76** Attack at EP-CYG-4
**60** Baja Buggies
**57** Castles & Keys
**59** Crash Dive
**61** Dancing Feats
**66** Fantastic Voyage
**67** Fast Eddie
**79** Flapper
**68** Final Orbit
**78** Fortune Hunter
**77** Fun with Art
**62** Hot Lips
**80** Jumpman Junior
**64** Learning with Leeper
**81** M*A*S*H
**82** Monster Maze
**83** Mr. Cool
**63** Oil's Well
**55** Parallax
**84** Plattermania
**85** Porky's
**76** Princess and Frog
**87** Revenge of the Beefsteak Tomatoes
**58** Ripper
**88** Sea Chase
**89** Spark Bugs
**72** Spider City
**69** Squish'em
**85** Starion
**55** The Bartender
**89** Topper
**56** Trion
**65** Turmoil
**88** Typo
**74** Whiz Kid
**70** Worm War I


## COMMODORE VIC 20®


**115** Anteater
**113** Aggressor
**138** Apple Panic
**138** Astroblitz
**100** Bandits
**95** Biorhythm
**135** Blackhole
**96** Bumper Bash
**116** Cannonball Blitz
**98** Capture the Flag
**117** Cloudburst
**93** Coma
**118** Creepy Corridors
**114** Crossfire
**97** Deadly Duck
**103** Fast Eddie
**104** Final Orbit
**77** Fun with Music
**139** Household Finance
**109** In the Chips
**121** Jawbreaker II
**122** Lunar Leeper
**123** M*A*S*H
**124** Monster Maze
**125** Porky's
**126** Predator
**137** Princess and the Frog
**105** Protector
**110** Rat Hotel
**127** Renaissance
**128** Revenge of the Beefsteak Tomatoes
**129** Robot Panic
**130** Satellites and Meteorites
**94** Serpentine
**99** Snake Byte
**102** Spider City
**102** Spills & Fills
**106** Squish'em
**132** Synthesound
**131** Terraguard
**131** Threshold
**136** Topper
**93** Trashman
**101** Turmoil
**111** Type Attack
**121** Typo
**107** Vic-Brain
**108** Vic-Organ
**136** Videomania
**137** Video Vermin
**147** Whiz Kid


**(continued on next page)**

# TABLE OF CONTENTS (continued)

## COMMODORE 64®


**156** Astroblitz
**152** Bandits
**156** Coma
**160** Dancing Feats
**151** Fast Eddie
**162** Jawbreaker II
**169** Learning with Leeper
**158** Lunar Leeper
**158** Mothership
**163** Motor Mania
**164** Mr. Cool
**167** Oil's Well
**157** Parallax
**157** Princess and the Frog
**165** Renaissance
**155** Ripper
**170** Sammy Lightfoot
**154** Snake Byte
**152** Squish'em
**161** The Bartender
**159** Threshold
**159** Trashman
**168** Turmoil


## TEXAS INSTRUMENTS 99/4A®


**179** Ambulance
**176** Anteater
**173** Cave Creatures
**181** Character Crayons
**174** Data Base Management (Sort Utility)
**173** Driving Demons
**179** Henhouse
**177** Hen Pecked
**178** Princess and the Frog
**182** Rabbit Trail
**177** Rotor Raiders
**180** Schnoz-ola
**180** St. Nick
**178** Topper
**176** Typo II
**175** Video Vegas

# TEXAS INSTRUMENTS 99/4A® HOME COMPUTER

# CAVE CREATURES®*. 8K

**BY FUNWARE®***

CATALOG NO. 08185

**For use with the Texas Instruments TI 99/4A® Home Computer.**

**OBJECT.** Shoot all of the creatures that encircle you without being destroyed. Use joystick (or arrow keys) to rotate ship left or right. Use fire button (or K key) to shoot. Use joystick up (or J key) to accelerate in direction ship is pointing. Space bar pauses.

Shoot spaceships, caves, creatures, eggs, and screemers for points. Bonus ships are awarded every 5000 points. White caves can be destroyed by shooting them twice, yellow caves by shooting once. Blue invader ships must be shot once. Eggs hatch into screemers when run over by a cave creature. Screemers must be avoided or shot once. The red "death ship" and green caves are indestructible.

Game ends when you lose your last ship.

* FUNWARE and CAVE CREATURES are trademarks of Funware, Inc.
© Funware, Inc. 1983

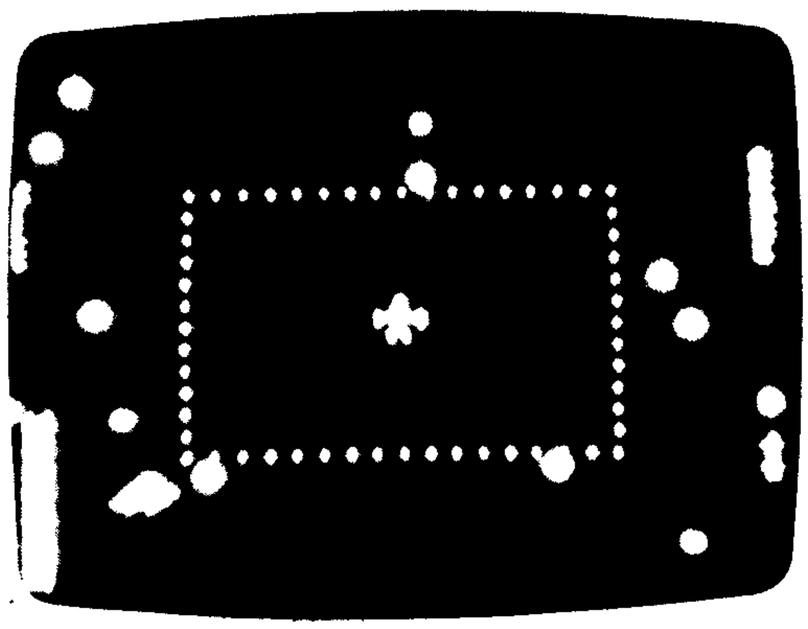

# DRIVING DEMON®* 8K

**BY FUNWARE®***

CATALOG NO. 06185

**For use with the Texas Instruments TI 99/4A® Home Computer.**

In this desperate auto race against the clock and the competition, you must weave through cars, skid through oil slicks, then floor it down the straightaway. You'll need lightning reflexes to survive ... and to win! Mile-a-minute thrills!

**OBJECT.** Drive as far as you can before you run out of cars or time. Use joystick to control car. Up increases speed. Down decreases speed. Right moves car right and left moves car left. Use fire button to shift up to next gear. Car automatically downshifts when speed is decreased. Crashes occur when car goes off road, collides with another vehicle, hits oil slick, or stays in red tachometer area too long and blows engine.

**FEATURES.** Long range scan shows position of obstacle cars as you approach them from behind. Warning signal tells of upcoming oil slick. 3 second bonus awarded for each car passed. Space bar pauses.

**GAME END.** 5 crashes or time runs out.

NOTE: The wired Remote Controllers are required to play this game.

* FUNWARE and DRIVING DEMON are trademarks of Funware, Inc.
© Funware, Inc. 1983

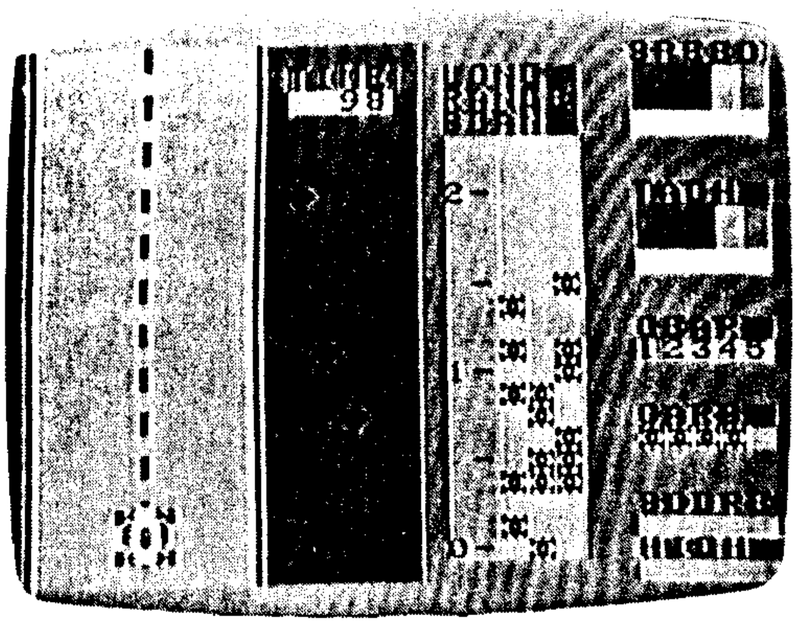

# DATA BASE MANAGEMENT (SORT UTILITY) 8K

**BY NAVARONE®***

CATALOG NO. 02155

**For use with the Texas Instruments TI 99/4A® Home Computer.**

**REQUIREMENTS.** 32K memory expansion, at least one disk drive.

**CONSIDERATIONS.** This program expects source files to be stored in FIXED/DISPLAY formats with Fixed field definitions. All fields must begin at the same position in each record.

All position entries are given relative to location 1. The maximum file size is equal to ½ the total available size of a single disk drive, if you have two single sided floppys, then the sort file cannot exceed 175 sectors, and you must use a blank diskette in the OUTPUT file. DBMS Sort will put all of the Sorted records into a new OUTPUT file, so you can keep your file in the original order. When the size of your Original file exceeds the space available in RAM (24K), a temporary output file is created to hold each segment of the Sorted file. These temporary files will be MERGED into the OUTPUT file during PASS 2 of the Sort program. This all happens automatically and after the temporary files have been merged, they are deleted.

**FILE ORGANIZATION.** Super Sort will not sort variable length files. All files must be in FIXED Record length format. That also means that each field within each record must be Fixed length and located at fixed locations. The following example shows how fixed fields are located within a record:

```
POSITION: 0 1 2
123456789012345678901234 5
Record 1 100JOHN JOHNSON 10/28/83
Record 2 101MARY SMITH 10/14/83
Record 3 102SAM JONES 10/30/83
```

Notice how each field is aligned within fixed positions in each record. All of the FIRST NAMES begin in Column 4 and all of the LAST names begin in Column 10. The length of the Field is the number of bytes allocated to the field. So that the length of the Field which contains the LAST NAMES is 8 Bytes. The Sort program of where it can find the field it will order, and the length of the order. Multiple Sort keys are useful when you have a nested requirement. A good example of a nested Sort is when you have a mailing list file and you want all the names to appear alphabetically within each Slate which is also alphabetized. With nested Sort you must determine the priority of each Sort Key and enter the field which will be primary Sort Key as SORT KEY O: Subsequent nesting is then entered in the order of priority. In the example used above, the STATE would be the highest priority because you want all the records sorted in State sequence first, then by name.

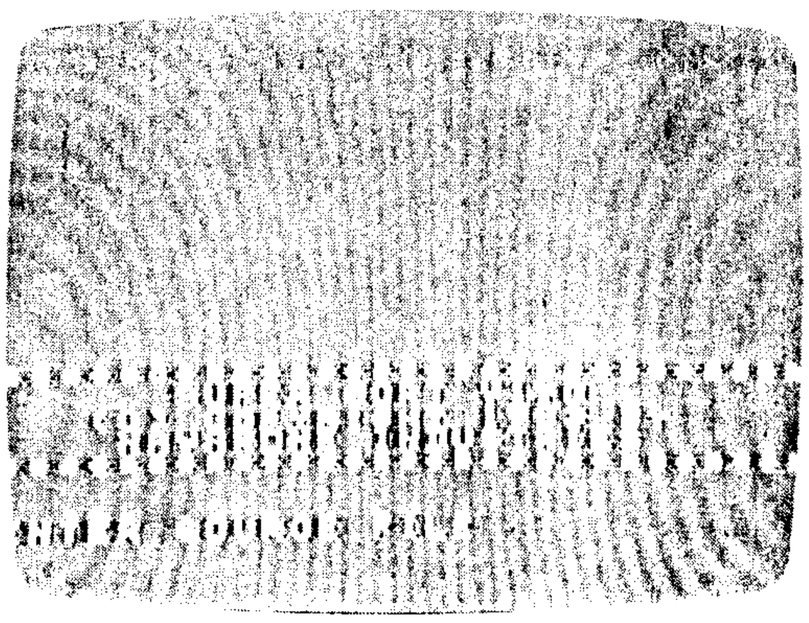

**SORT KEY.** A Sort Key is a field within a record that is used to determine the order in which the record is sorted. You may sort with up to Six different Sort Keys with SUPER SORT. To see how this works, lets refer to the example file shown in figure 1. There are 4 different fields defined in these records:

| FIELD | POSITION | LENGTH |
|---|---|---|
| Number | 1 | 3 |
| First Name | 4 | 6 |
| Last Name | 10 | 8 |
| Date | 18 | 8 |

Suppose you want to Sort this file, so that the LAST NAMES are all alphabetized from A to Z. To do this you need only ONE SORT KEY, the field containing the LAST NAME. Examine the Record in Figure 1, and see the way fields are defined. When entering SORT KEYS, you are simply informing.

**SORT SELECT FIELD.** Suppose you have a file that contains certain "Codes" that identify different categories of records, and you want to sort only certain records. Lets say that in your record there is a field that contains a single byte to represent a Mailing Code, and this byte can be a number or letter to represent a MALE or a FEMALE. If you want to sort only the MALE records you can use the Select Field to retrieve only those records that contain the code for MALE names. The SELECT FIELD, a string of characters that are used to compare with each record. You can specify whether to select (and sort) records Equal to or Not Equal to this string.

**DATA BASE FILE CONVERSIONS.** To convert your data files to FIXED FIELD format suitable for DATA BASE MANAGEMENT Sorting, you will need to place all of your Variables into FIXED Size records. Determine the maximum record size needed to contain all of the variables. If your file was opened with a VARIABLE parameter, then the default size of 80 was used as the Maximum Value, or if a Value was Specified such as Variable 200, then use this value as the record size of a FIXED File. You will have to Write a small program in BASIC to convert your Variable file to a Fixed File. It will be necessary to OPEN a NEW FILE and copy all of the Data from your Data Base into this NEW File.

The reformatting is necessary so that each of your Variables are positioned in known and predictable locations within each record. This can be accomplished converting all numerical Variables to String, then padding all Variables with Blanks to the sizes of fields necessary to contain your information. Once you obtain the FIXED Length Variable, they are Concatinated into a Single Variable for outputting. CONVERT All Numeric data to Strings. Suppose you have a numeric value stored in your DATA BASE file. This Variable can be read in the INPUT Statement as the Variable A, you can use the following code to change this value to a String.

```
A$ = STR$(A)
```

Now you must Pad these Strings with enough Blanks to fill up the Size of Each Filed. You must first Determine the Size of each field in your record. But, before this, you must determine the Maximum length of each Record. As we discussed earlier, this is usually the value found at the OPEN Statement for your OLD Variable file. USE the value in the OPEN ATTRIBUTE as the Maximum Record length. If the file was OPENED with a VARIABLE 114, your Records will have to be 114 Bytes long. To consume the entire 114 Bytes of each record, you will need to place your variables at certain locations within each record. Examine your file with respect to what the records contain. Determine how many characters you need for each Field (variable), then pad strings to that size.

If for example your records consist of customer numbers, first name, last name, street address, city, state and zip code. Then you may have a record that looks like this:

(continued on next page)

| FIELD | VARIABLE | SIZE | POSITION |
|---|---|---|---|
| 1 | CUSTNO | 5 | 1 |
| 2 | FNAME$ | 20 | 6 |
| 3 | LNAME$ | 20 | 26 |
| 4 | ADDRS$ | 30 | 46 |
| 5 | CITY$ | 20 | 76 |
| 6 | STATE$ | 10 | 96 |
| 7 | ZIP$ | 9 | 106 |
| | TOTAL BYTES IN RECORD — — | | 114 |

We have provided a FIXED number of bytes for each FIELD in our record, adding all fields we get the total number of bytes in our record. In order to place each FIELD into the position specified, we need to PAD each variable with blanks, or spaces. The following statements can be used to accomplish this.

```
100 S=5 (MAX SIZE OF FIELD)
110 CUSTNO$=SEG$(STR$(CUSTNO)&RPT$(" ",S),1,S)
120 S=20
130 FNAME$=SEG$(FNAME$&RPT$(" ",S),1,S,)
```

Now the last thing we need to do before writing the record is to concatinate all of the fields into a single Variable. This means to simply combine all of the string variables into a single string.

```
R$=CUSTNO$&FNAME$&LNAME$&ADDRS$&CITY$&STATE$&ZIP$
```

The resultant string "R$" contains all of the variables each located in the positions shown in the above chart. Now this record can be written to your new FIXED Length File. Once your data base is converted to a FIXED length file, you can sort on any combination of fields by specifying the location of these Variables as SORT KEYS from the Sort Program.

RONE and DATA BASE MANAGEMENT are trademarks of Navarone.
© ...varone 1983

# VIDEO VEGAS®* 8K

## BY FUNWARE®*

CATALOG NO. 02185

**For use with the Texas Instruments TI-99/4A® Home Computer.**

**INSTRUCTIONS.** Test your luck at the most realistic slot machine outside of Las Vegas! Authentic, exciting sound effects dramatize the action and help to create an atmosphere of winning – or losing! Begin with winnings of "$100" and try to double – or triple – your "money"!

Press 1, 2 or 3 to indicate bet amount. Winnings begin at $100. Press D to activate automatic re-coll (demonstration) mode. Program will respin until winnings reach 0 or until "quit" command is given. Pressing any other key rerolls using the same bet amount last entered. Press "quit" to end game.

* FUNWARE and VIDEO VEGAS are trademarks of Funware, Inc.
© Funware, Inc. 1983

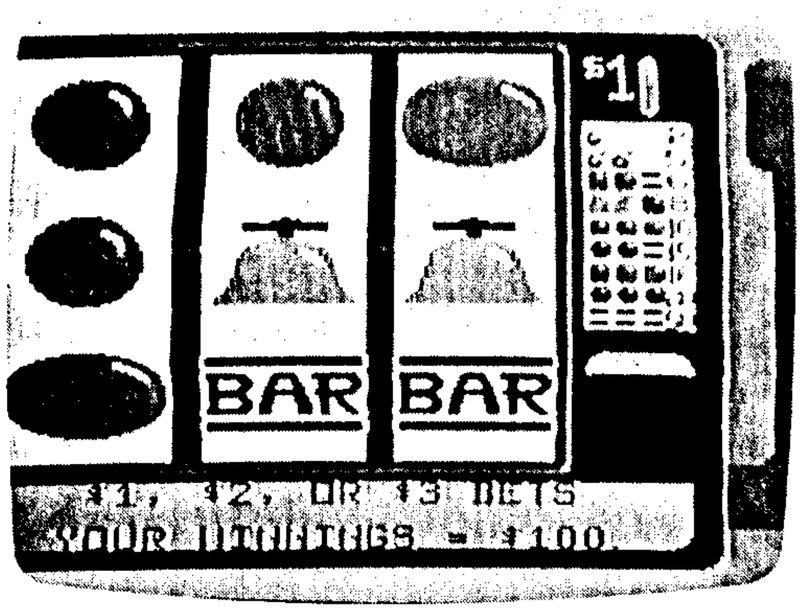

# TYPO II®* 8K

## BY R.S. PUBLISHING®*

CATALOG NO. 04025

**For use with the Texas Instruments TI 99/4A® Home Computer.**

Journey into the land of enhanced reality with TYPO II. This exciting educational game is by ROMOX, for your Texas Instruments 99/4A® Home Computer. TYPO II is an educational and fun challenger for one player at a time.

In TYPO II you can learn and improve your typing skills while enjoying the high speed action of a real arcade game on your home computer. No more long hours at the keyboard for you, with nothing to do but type. In TYPO II you control the action! And while you play, you learn. TYPO II is a fun and challenging maze game where you, the player control the letter crunching jaws. As you eat your way through the realms of letters, you are chased and hounded at every bend by the Protectors of the Word. The Protectors, also known as boxing gloves, want but one thing: to knock you out! So beware, quick thinking and agile fingers will carry you through.

**TO PLAY TYPO II.** Insert your Typo II cartridge in the cartridge slot of your Texas Instruments 99/4A® computer. Once inserted, turn on the system power, and select TYPO II. At this point you will be presented with an instruction screen. Here you may choose your total playing time by pressing the "T" key. You may select from 1 to 9 minutes of enjoyment. Next select your playing speed, or the speed you will be chased by the gloves. This may be from 1 to 120, relating to your words-per-minute rate. You're now all set. Just press "S" to Start, and away you go. You can pause Typo II as you play by pressing the SHIFT/$ key.

You will notice as the maze appears, that the maze is full of letters. To move about in the maze and avoid the gloves; you must type the letter next to your jaws in the direction you want to go. If the letter next to the jaws on the left is a "G" and you want to go left, simply press the "G" key. Another letter will be on the right, top, and bottom. To go in any direction simply press that letter next to your jaws. As you can see, six tunnels are also part of the maze. They can be used to escape from the gloves. The gloves can not follow you through completely. To use a tunnel, type the letter at the tunnel mouth for that tunnel pair. Each tunnel has a pair on the opposite side. The upper left extends to the lower right. The top center to the lower left, and the upper right to the bottom center.

Also in the maze are a number of flashing letters which dcorrespond to the letters at the bottom of the screen. These are bonus letters. You are scored for each regular letter you eat, but receive an extra amount for each flashing letter you gobble down. And after you have eaten them all, an extra bonus is given to you. You will also be scored by your actual percentage of correctly typed letters, as well as the average typing speed you were able to maintain.

With time and practice your typing skills will improve. To adjust the level of difficulty, simply increase the speed of the protecting gloves. It is good idea to set the glove's speed to just a little faster than your own typing speed. In this way, TYPO II will continue to challenge and entertain you.

NO JOYSTICK OR OTHER ACCESSORIES REQUIRED.

* R.S. PUBLISHING and TYPO II are trademarks of R.S. Publishing.
© R.S. Publishing 1983

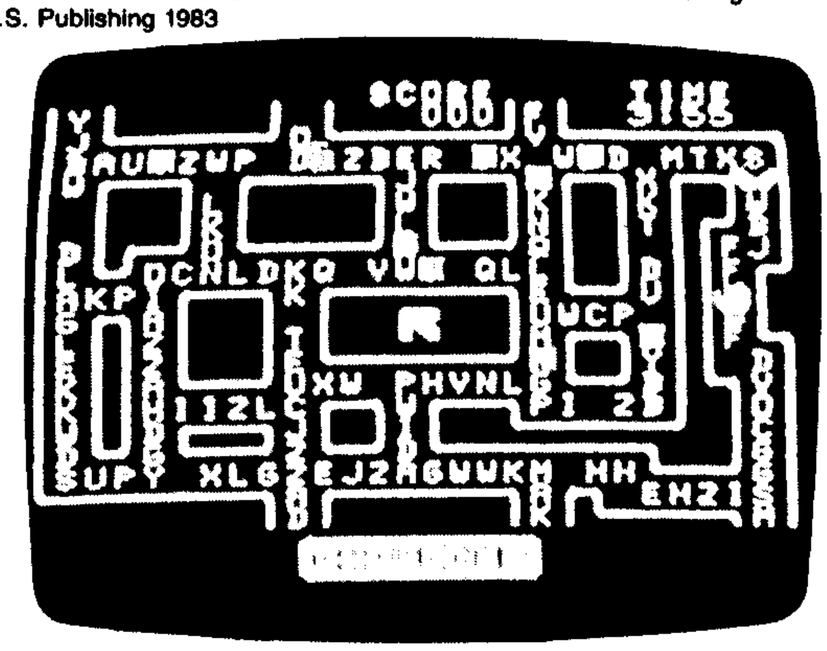

# ANTEATER®* 8K

## BY R.S. PUBLISHING®*

CATALOG NO. 02025

**For use with the Texas Instruments TI 99/4A® Home Computer.**

ANTEATER is a one player game for your Texas Instruments 99/4A® Home Computer. After inserting the ANTEATER game Cartridge, turn on the computer and press any key for the system menu. Press 2 to enter ANTEATER. Type "N" for play without music, or "D" for demonstration only. By pressing 1 through 9 you may choose your starting level of difficulty.

**THE OBJECT.** The object of the game is survival. To gain points use the joystick to move the ant from the colony to the food on the surface and back to the colony. However, when the ant breaks through the surface, he exposes himself to the deadly Anteater.

The ant is armed with five deadly eggs that explodes seconds after the fire button is depressed on the joystick. The ant may also maneuver the anteater under a rock, causing it to fall and crush the hapless pursuer.

The ant moves faster than the anteater when traveling in tunnels so you can adjust your distance for laying the delayed eggs by retracing your steps. You have three ants at the start of the game. Returning all four cubes to the colony completes the set and gives you an extra ant. On the second set, you must evade two eaters and on the third set, three eaters. The speed of the game increases with each set.

Good Luck!

* R.S. PUBLISHING and ANTEATER are trademarks of R.S. Publishing.
© R.S. Publishing 1983

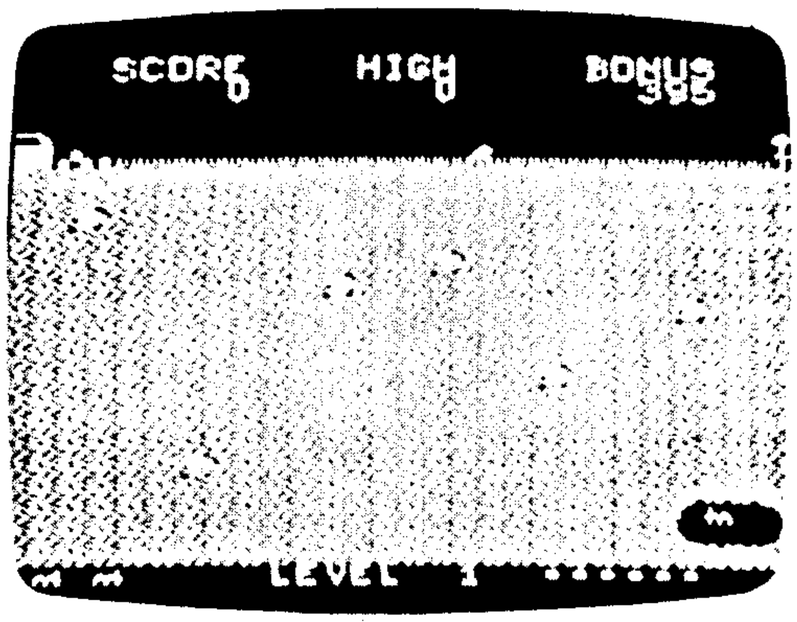




R.S. PUBLISHING

# ROTOR RAIDERS®* 8K

## BY R.S. PUBLISHING®*

CATALOG NO. 06025

**For use with the TI 44/9A® Home Computer.**

Enter the darkness that lies below in the new ROMOX hit game, ROTOR RAIDERS. ROTOR RAIDERS – another exciting ROMOX ECPC cartridge for your Texas Instruments 99/41® home computer. This is the one! The most entertaining maze game ever!

In ROTOR RAIDERS, you explore the vast uncharted regions of enhanced reality beneath your very homes. Through pipes and drains you wind your way to remove those nasty sewer rats, and clear their footprints from the plumbing. You enter from above; but just when all is going well, the rats show up. First there is one, then two, and more. Every few seconds another comes into the pipes your remote-controlled router tries to clean out. Soon there are four rats. But, as long as there are rats, you can't clear the system. There is just one problem: the rats are just as fast as your remote rotor. To remove them you have to trap them in the dead-end pipes. There you can force them from the maze. Here you must be clever – these rats are not so dumb. Still, you have it made and that Duracent battery flashlight of yours goes out, leaving you in darkness. But with a tap or two, it comes back on, and away you go. As you scrap your way through the sewers of your home town, your rotors get very dull and wear down. In fact, each rotor will only last about thirty seconds, so make it quick.

To play ROTOR RAIDERS, insert your ROMOX ROTOR RAIDERS ECPC game cartridge into the cartridge slot of your TI 99/4A® computer, and turn on the power. Once inserted, select ROTOR RAIDERS. You must now select the number of those brave enough to enter the steamy, slimy sewers to play. You can also select how hard you want your adventure to be. Now you are ready to begin. Use your joystick to control the direction of your r[illegible] rotor as you maneuver through this underground domain. Try to r[illegible]e the footprints as fast as you can. The rats cannot be caught, but they can be trapped. So go to it! At any time you may restart the game by pressing the FUNCTION/= keys. To obtain the instruction screen, press FUNCTION/7. As you progress from screen to screen, your speed will increase, but so will the wear on your rotors. However, you are given a new set of rotors with each new maze. So move with speed and skill, or the rats will take over. Only you can prevent footprints!

ROTOR RAIDERS may be played by keyboard or with a Texas Instruments compatible joystick.

* R.S. PUBLISHING and ROTOR RAIDERS are trademarks of R.S. Publishing.
© R.S. Publishing 1983

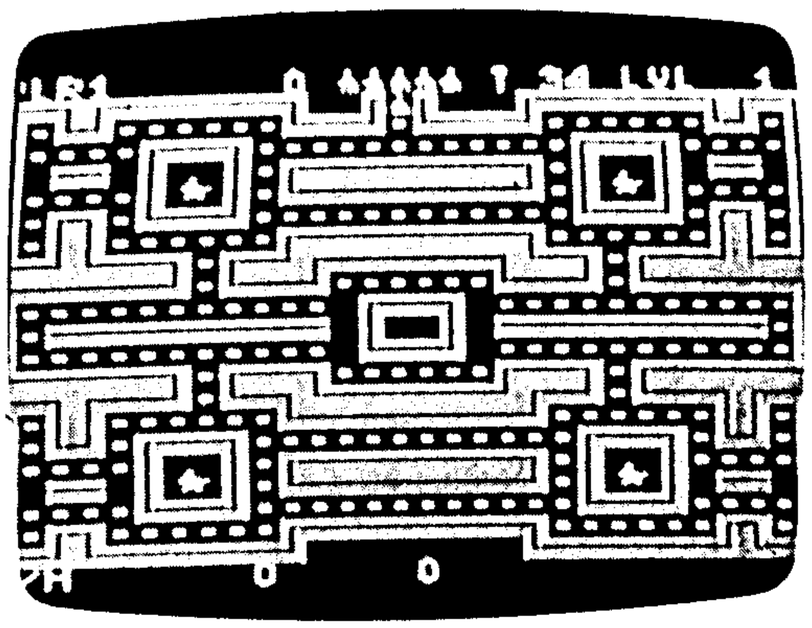

# HEN PECKED®* 8K

## BY R.S. PUBLISHING®*

CATALOG NO. 03025

**For use with the Texas Instruments TI 99/4A® Home Computer.**

You as the Red Rooster must catch the roving Hens by flapping your wings with the fire button and changing directions with the joystick. You must approach a Hen from ABOVE. Otherwise consider yourself "HEN-PECKED", as the screeching rooster is returned to the Hen House where another Egg will hatch into a Red Rooster.

Catch a Hen by approaching it from above. The Hen will turn into an Egg and then catch the Egg before it hatches, to gain extra points and keep more chickens from hatching. Each level gives more Hens to chase and capture.

HEN PECKED is a two player action game by ROMOX. In HEN PECKED, territorial tactics faithfully recreate the best of barnyard banter! You, as the rooster, have a choice: to rule the roost or become totally HEN PECKED. However, be warned: the hens are not just sitting there laying eggs!

As a rooster you want to catch the hens from above and turn them into eggs. Once you accomplish this, catch the egg immediately for extra points.

If a hen hits your rooster from the front, he turns into an egg and loses a life.

Insert your ROMOX HEN PECKED game cartridge into the cartridge slot. Turn on the power. Press any key for the system menu, then press #2 for HEN PECKED. Enter the number of players and press any key or joystick Fire button to begin. To move your rooster, use the arrow keys (Up, Down, Right, Left) or the joystick. To flap your wings, press the Q key or the joystick Fire button. You may pause this ROMOX game at any time by pressing the P key.

* R.S. PUBLISHING and HEN PECKED are trademarks of R.S. Publishing.
© R.S. Publishing 1983

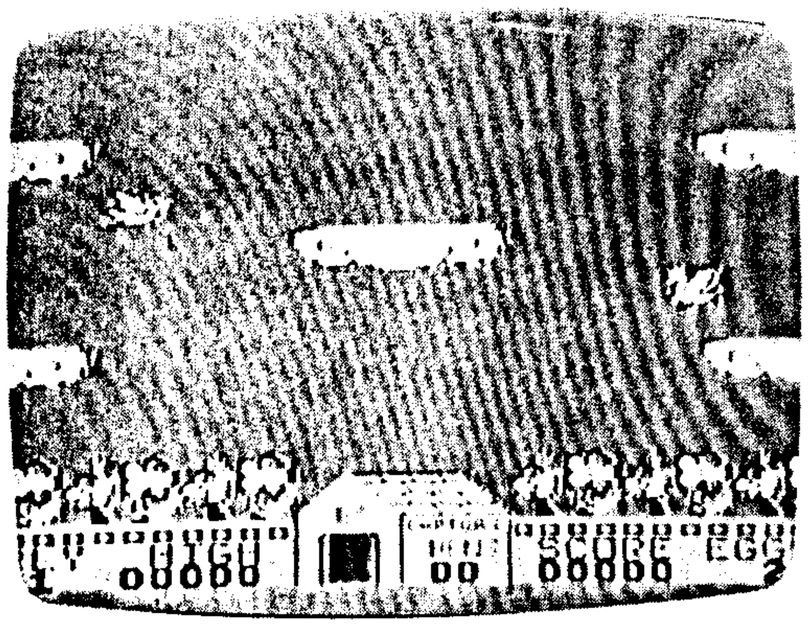

# TOPPER®* 8K

## BY R.S. PUBLISHING®*

CATALOG NO. 05025

**For use with the TI 99/4A® Home Computer.**

TOPPER is another exciting ECPC reusable game cartridge by Romox for your Texas Instruments 99/4A® Home Computers. You need fast reflexes in this high speed action game in the realms of enhanced reality. A challenger for one or two players.

Poor Topper, the lovable little turtle who tries to liven up his universe by painting his galactic tiles. But, the mysterious Dynomite and the Renegade Rabbits will stop him if they can. It's up to you. Can you help Topper, while keeping him from getting caught by the Regenade Rabbits? Can you save him from the mysterious Dynomite before his tile is demolished? Topper needs you!

To begin your adventure into Topper's enhanced reality, insert your ROMOX cartridge into your TI 99/4A® Home Computer and turn on the power. You select to play alone or with a friend, and choose Topper's difficulty levels from "A" through "D". Get ready – here comes Topper!

Now it is up to you. You must help Topper get from tile to tile to paint his home; but watch out – the tiles don't want to be painted and fly off when they can. Don't worry, though – a tile cannot fly off with Topper on it, so you are safe. But not safe from the mysterious Dynomite or the Rabbits. As you advance from group to group, the difficulty will change, and Topper will have a really tough time trying to finish. So keep your hand steady and your wits about you.

The levels of difficulty will change automatically from "A" through "D" every four tile groups, unless otherwise selected at the beginning of the game. Time is your worst enemy. In each level, a fixed time limit makes Topper have to hurry more and more. In level "A", only the tiles try to escape from your Topper. This is the easiest level. In level "B", your tiles continue to jump out and in. But now you have to face the mysterious Dynomite Stick, which looks for you everywhere. Its job in life is to break your tiles with you on them! In level "C", the Rabbits are here. The Renegade Rabbits have landed and are out to get you. But in this level, you only have to worry about one Rabbit. In level "D", a whole bunch are out to stop you! The tiles jump off at any moment. The Dynomite will try to blow the tile you are on, and the Rabbits will try to catch your Topper. If you can save him and complete the tile group before the time runs out, you get to do it again, and again, and again...

TOPPER may be played by keyboard control or by using an optional Texas Instruments 99/4A® compatible joystick. If using a joystick controller, move your joystick in diagonal directions only. For keyboard control, press the following keys for player 1 or player 2.

| PLAYER 1: | PLAYER 2: |
|---|---|
| "A" = Upper/Left | "H" = Upper/Left |
| "F" = Upper/Right | "L" = Upper/Right |
| "Z" = Lower/Right | "N" = Lower/Right |
| "C" = Lower/Left | "<" = Lower/Left |

* R.S. PUBLISHING and TOPPER are trademarks of R.S. Publishing.
© R.S. Publishing 1983

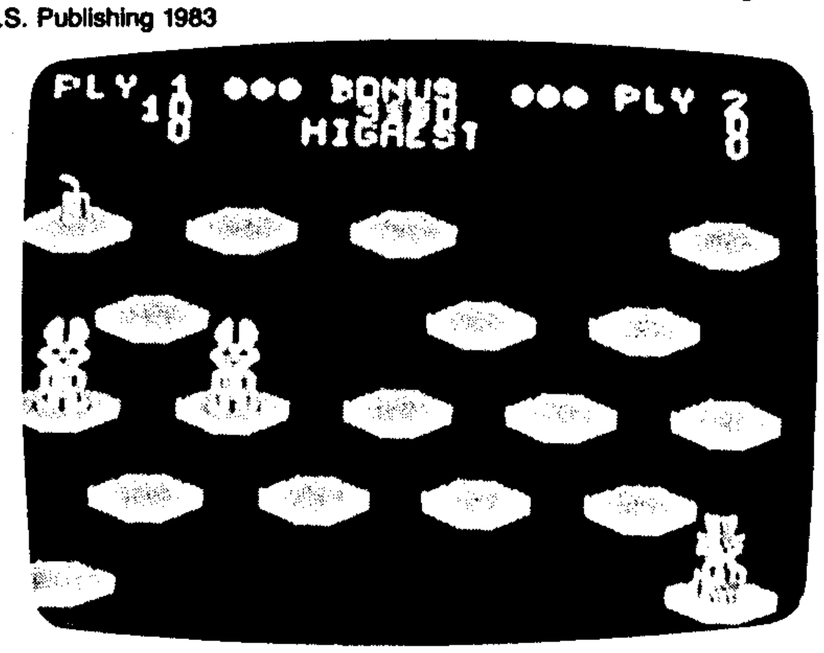


# PRINCESS AND THE FROG®* 8K

## BY R.S. PUBLISHING®*

CATALOG NO. 01025

**For use with the Texas Instruments TI 99/4A® Home Computer.**

PRINCESS AND THE FROG is a one player game for the Texas Instruments 99/4A® Home Computer. After inserting the game cartridge in the computer, turn on power, and press any key for the system menu. Type 2 for PRINCESS AND THE FROG. Press the joystick Fire button to begin your game. The game may be paused at any time by pressing the "P" key on the keyboard.

**THE OBJECT.** The object of the game is to gain points by moving your frog past a field of jousting knights, across a moat filled with alligators and snakes (watch out for the alligators — they submerge periodically, and the snakes are slippery), and unite with the princess of the castle. Jumping into one of the castle gates gives you another frog and extra points. If your timing is good and luck is on your side, your frog will kiss the lips of the princess and turn into a prince. Bonus points are gained by mating with the female frog of the moat on the journey to the castle gates.

Your joystick allows the frog to jump in all directions to avoid dangers during the journey, but don't delay getting to the princess because 60 seconds is all you have.

* R.S. PUBLISHING and PRINCESS AND THE FROG are trademarks of R.S. Publishing.
© R.S. Publishing 1982

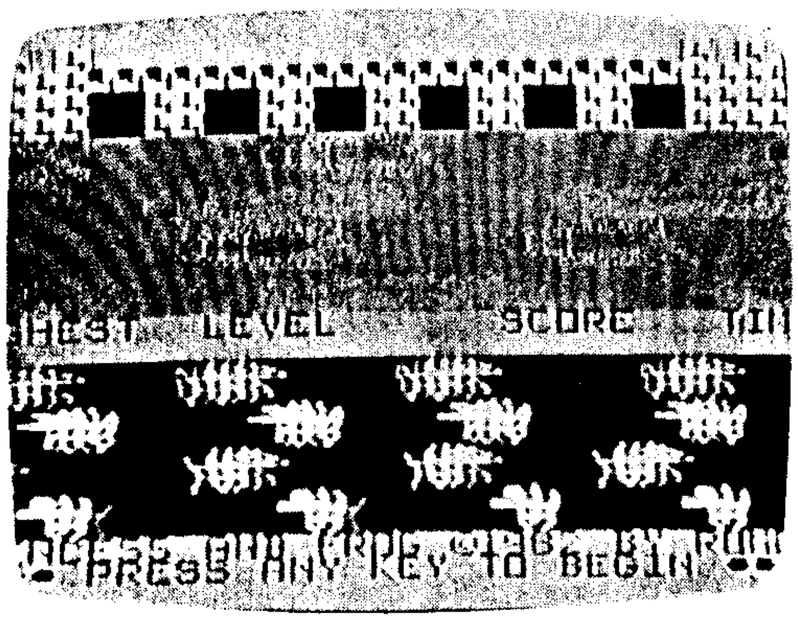

# AMBULANCE®* 8K

## BY FUNWARE®*

CATALOG NO. 03185

**For use with the Texas Instruments TI 99/4A® Home Computer.**

Race your ambulance through the city to save ailing citizens. Avoid cars and approaching trains while making use of your emergency shelters. Score points for safe patient deliveries. Faster deliveries get more points!

**OBJECT.** Get sick people to hospital or emergency centers before they die. Use joystick or arrow keys to maneuver your ambulance around the city. To pick up a patient drive ambulance to appropriate house, move ambulance in direction needed to "park" at house, then press fire button (or Q key). Use the same sequence to drop off a patient.

**SCORING.** Points are scored when patients are delivered to the hospital or the emergency centers. 50 points are awarded for deliveries to emergency centers regardless of the patient's condition. Hospital deliveries are rewarded with points based on the patient's condition.

Poor (white): 300 points.
Bad (red): 250 points.
Critical (black): 200 points.

**GAME END.** 3 crashes or 5 deaths ends game.

NOTE: This game can be played using the optional Wired Remote Controllers.

* FUNWARE and AMBULANCE are trademarks of Funware, Inc.
© Funware, Inc. 1983

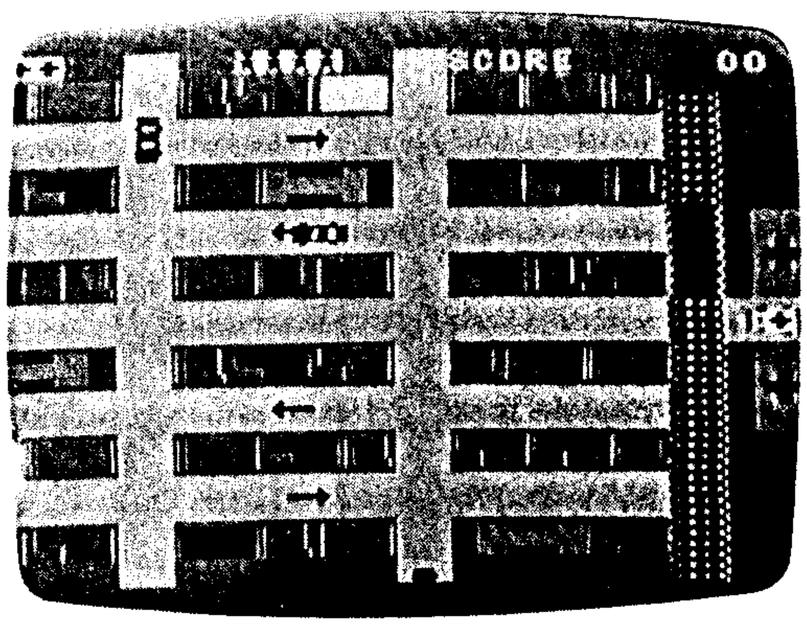


# HENHOUSE®* 8K

## BY FUNWARE®*

CATALOG NO. 07185

**For use with the Texas Instruments TI-99/4A® Home Computer.**

Help Farmer Jones collect the eggs from his henhouse. But be careful! His hens are finicky, and demand the utmost attention and care with their eggs. Score points with each basket of eggs you safely deliver to Farmer Jones' truck. But watch out for wolves and poachers – you must take aim and shoot them before they reach the henhouse. And don't drop any eggs!

**OBJECT.** Score points as you catch the eggs as they come out of the henhouse, and get them to the farmer's truck. But watch out! The wolf and the poacher are stalking the henhouse. Your rifle is handy, but don't drop any eggs while shooting. Use fire button on remote controller (or Q key) to shoot rifle. Use fire button to pick up eggs (chutes must be completely full). Take eggs to the truck after you've picked them up.

**SCORING**

50 points for each bird you shoot.
200 points for a poacher you shoot.
20 points per egg loaded into truck.
For each poacher missed, you lose one egg.
Every 5,000 points, one broken egg is taken away (or credited).

**GAME END.** Six broken eggs or a wolf in the henhouse ends the game.

NOTE: This game can be played using the optional Wired Remote Controllers.

* FUNWARE and HENHOUSE are trademarks of Funware, Inc.
© Funware, Inc. 1983

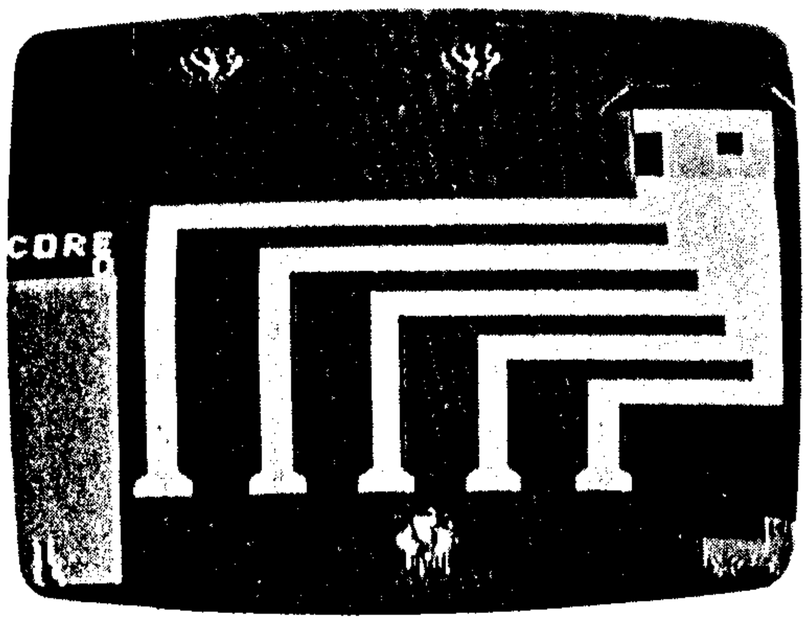

# ST. NICK®* 8K

## BY FUNWARE®*

CATALOG NO. 01185

**For use with the Texas Instruments TI 99/4A® Home Computer.**

Evil witches have cast a spell on Santa's elves, turning these nice folks into positively mean critters! The elves have stolen the toys from Santa's workshop and scattered them all over. You must help St.Nick collect the toys in time or he'll be late for Christmas!

**OBJECT.** Pick up all the toys in the order indicated before time runs out. Use joystick or arrow keys to move St.Nick around the screen. Toys are picked up when they are hit by his shoulders, hands, or feet. Toys are not picked up if hit by St.Nick's head. All toys of one "type" must be picked up before picking up the next "type" of toys. Avoid being hit by witches or picking up a toy out of order. Blocks may be picked up at any time. Picking up the blocks to spell out the word SANTA causes the witches to "freeze". During this "freeze" the toys may be picked up in any order.

**SCORING.** Points are awarded for picking up toys and blocks. Bonus points are awarded for spelling SANTA and for completing a screen.

**GAME END.** 3 INCOMPLETE screens ends the game.

NOTE: This game can be played using the optional Wired Remote Controllers.

* FUNWARE and ST. NICK are trademarks of Funware, Inc.
© Funware, Inc. 1983

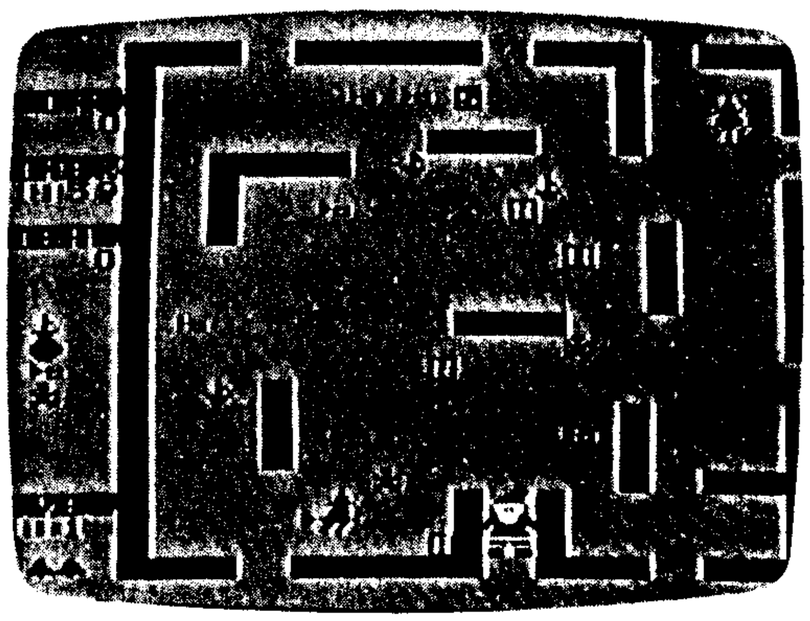

# SCHNOZ-OLA®* 8K

## BY FUNWARE®*

CATALOG NO. 04185

**For use with the Texas Instruments TI 99/4A® Home Computer.**

Precious tokens are spread around a pyramid. You are challenged to collect all the tokens and return them to the top of the pyramid without getting wiped out. You can jump from level to level, but avoid "Ola" balls and bottomless pits!

**OBJECT.** Collect all the tokens and return to the top of the pyramid without getting killed. Tokens are collected when Schnoz steps on them. Use joystick (or Left and Right arrow keys) to move Schnoz toward left or right of pyramid. Use fire button (or "Y" key) to jump. Use joystick (or Up arrow key) to climb ladder. To jump to a lower level of the pyramid, press the fire button when Schnoz is standing next to "jump triangles." The ladder to the top of the pyramid appears when Schnoz picks up the last token. Schnoz can perform a running jump on the horizontal section of the two lower levels of the pyramid.

**SCORING.** Points are awarded for picking up tokens and for completing screens. A bonus Schnoz is awarded at 10,000 points and every 20,000 points thereafter.

NOTE: This game can be played using the optional Wired Remote Controllers.

* FUNWARE and SCHNOZ-OLA are trademarks of Funware, Inc.
© Funware, Inc. 1983

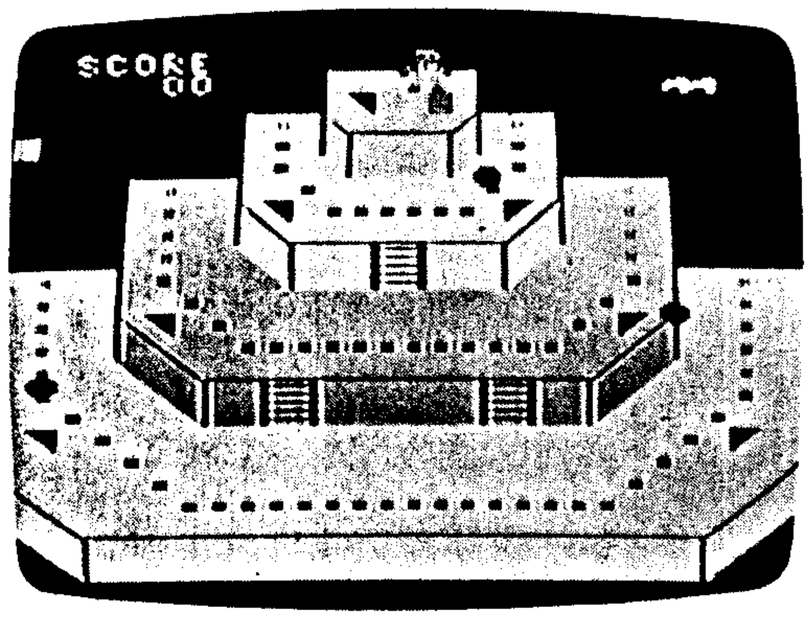

# CHARACTER CRAYONS®* 8K

## BY R.S. PUBLISHING®*

CATALOG NO. 07025

**For use with the Texas Instruments TI 99/4A® Home Computer.**

CHARACTER CRAYONS, a first for ROMOX Software Publishing. The first truely useful graphics design utility cartridge for the Texas Instruments 99/4A® Home Computer.

With CHARACTER CRAYONS you can design custom character sets and even high-resolution multicolored screens for use in your own Basic programs. You can modify any of the standard TI 99/4A® characters or design new character forms completely from scratch. Characters may be designed one by one, then used to design high-res graphic screens in all 16 available colors.

**INSTRUCTIONS.** When CHARACTER CRAYONS has been activated, you are presented with four design areas.

1. CHARACTER SET. The current character set is displayed in upper left area of the screen. A square selection cursor or pointer is used to select the character to modify or edit. Use the E S D X keys on the keyboard to move the character cursor from one character to another. The character pattern will automatically appear in the CHARACTER EDIT area.

2. CHARACTER EDIT. The character edit area is located in the upper right of the screen and is used to actually modify or design a single character. To edit a character use the TI Joystick controller to move the edit cursor within the edit area. If the edit cursor is moved beyond the edit area border, the character will be shifted to another character within the character set. To design a character simply press the joystick button and a dot or pixel will be placed at the current edit cursor location. Pressing the joystick button again will erase the pixel currently at that position. By holding the button while moving the joystick you may draw or erase. Below the edit window area is the character currently being drawn; but horizontally shifted to allow you to correct for problems with television artefacting.

3. SCREEN. Located in the lower right area of the screen is the graphics screen window, which allows you to edit the graphics screen while viewing the character set area or the edit area. To move the cursor within the graphics screen area hold down the SHIFT key while pressing the E S D X keys. To draw in the screen area you must first select the character to be used from the character set. Move the character set cursor to the desired character. You may edit the graphics screen through the window or in the full screen mode. To edit in the window press ENTER key and cursor control is provided by the E S D X keys and the Q key to leave the character. Or you may press the SPACE BAR key. This will change the screen to the full graphics screen. Now use the Joystick to move within this screen and the button to leave the selected character. To change characters, press the SPACE BAR again to return to the character set screen, and select another character.

You may SAVE your newly created character set and graphics screen by pressing the 2 key. You then type in the disk file name. To load a previously saved character set and graphics screen, press the 1 key, and enter the file name.
EXAMPLE: DSK1.NEWSET

You can change the shape of the cursor at any time by pressing the C key.

* R.S. PUBLISHING and CHARACTER CRAYONS are trademarks of R.S. Publishing.
© R.S. Publishing 1983

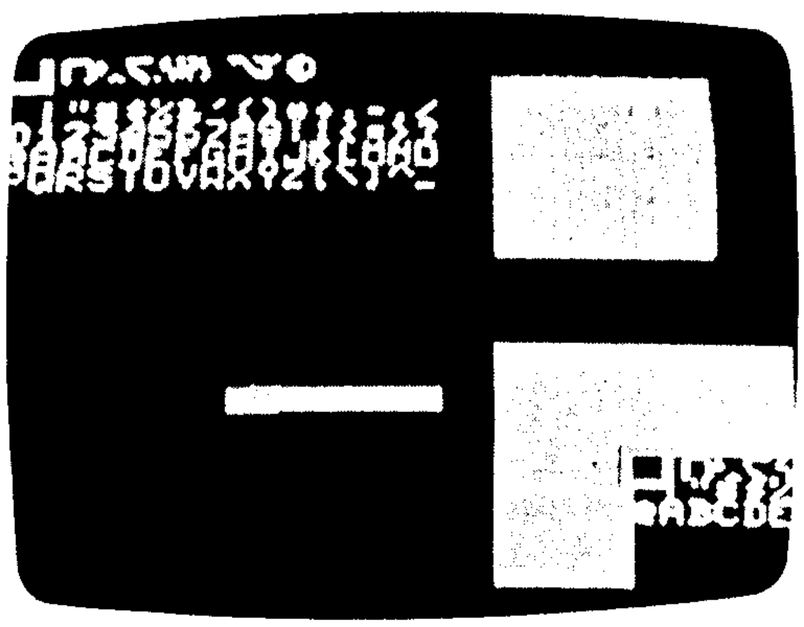

# RABBIT TRAIL®* 8K

**BY FUNWARE®***

CATALOG NO. 05185

**For use with the Texas Instruments TI 99/4A® Home Computer.**

Watch out for the weasels, hawks, traps and cars or hop onto a raft to escape your enemies. Collect all the carrots as you crawl through rabbit holes. Seven different playing screens make this game an ultimate challenge!

**OBJECT.** Score points as you collect all the carrots on the rabbit trail. But watch out for your enemies along the way! Use remote controller to move rabbit along the trail, and fire button (or Y key) to jump and pick up carrots or to avoid weasels. Watch bonus timer at top of screen: if it counts down to zero, you lose your life!

**SCORING.** 100 points for every carrot collected, plus the score amount left on the bonus timer at the completion of each screen.

**FEATURES.** Press the space bar at any point during the game to pause all action. Pressing any key resumes game play. Press "redo" or "back" to start another game.

* FUNWARE and RABBIT TRAIL are trademarks of Funware, Inc.
© Funware, Inc. 1983

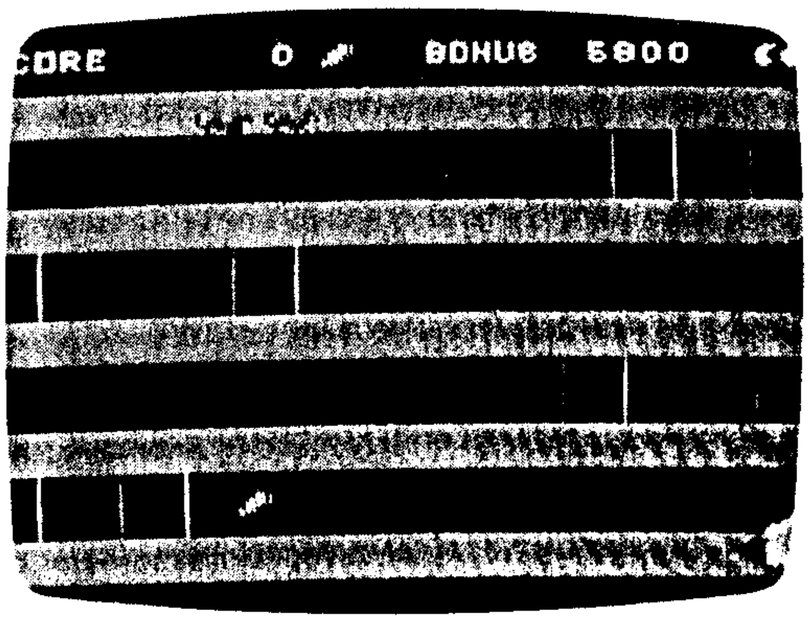

# Where do you go when there's nowhere to go? Navarone.

Things look pretty bad for TI 99/4A owners. So what happens now that your Console can't go home again? Read on. You'll see what we have up our sleeves.

## GIVE YOUR CONSOLE ETERNAL LIFE

We have taken our successful *Widgit* and made it better. Introducing our *New Cartridge Expander.* It inserts directly into the game slot on your TI 99/4A. You can plug in up to three command modules at one time. With three sockets and a selector switch, you can choose between your favorite modules without plugging and unplugging. A built-in reset button allows you to reset the computer without turning the power off and on. And by bringing the cartridge to a verticle position on the Expander, we've increased ambient cooling.

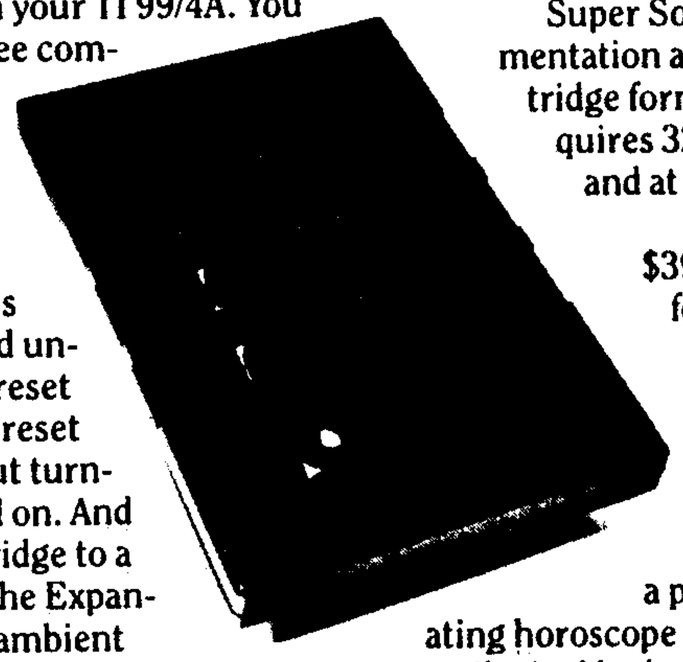

Not only have we eliminated overheating and program failure, we have given your Console longer life. By removing the possibility of wearing out the Console's cartridge slot, we've just about made your TI immortal. After all, when something wears out or breaks it won't be easy to find service or parts anymore.

The Cartridge Expander is easy to use and easy on your pocket book—priced at a low $39.95. When ordering, ask for catalog number WD-01.

## ELECTRIFY YOUR FILES

Now you can turn those paper files into electronic files. And get any information you want, in any order you want, faster.

We proudly present our *Data Base Management Series,* featuring many programs to increase your personal productivity. Now you can spend less time searching and more time doing.

*Super Sort,* our assembly language cartridge program provides many DBM functions. It is menu driven to arrange your files in ascending or descending order with up to six nested keys. And is a high speed disk sort utility program written to handle large files. It is limited only by the disk space available, so you can shrink your paper files down to a manageable size.

Super Sort comes with full documentation and is available in cartridge format only. The program requires 32K memory expansion and at least one disk drive.

Find more for less, only $39.95. When ordering, ask for catalog number AS-03.

## TOP OF THE CHARTS

Within *Astrology-Horoscope Maker* we have written a powerful program for creating horoscope charts easily. And look at the kind of chart you are able to print.

This software program determines the precise location of each planet automatically. You won't need tables and lengthy calculations. You are able to print full wheel charts selecting up to nine house systems and have the planets appear in their respective houses. Included are elements, declinations, dignitaries and more.

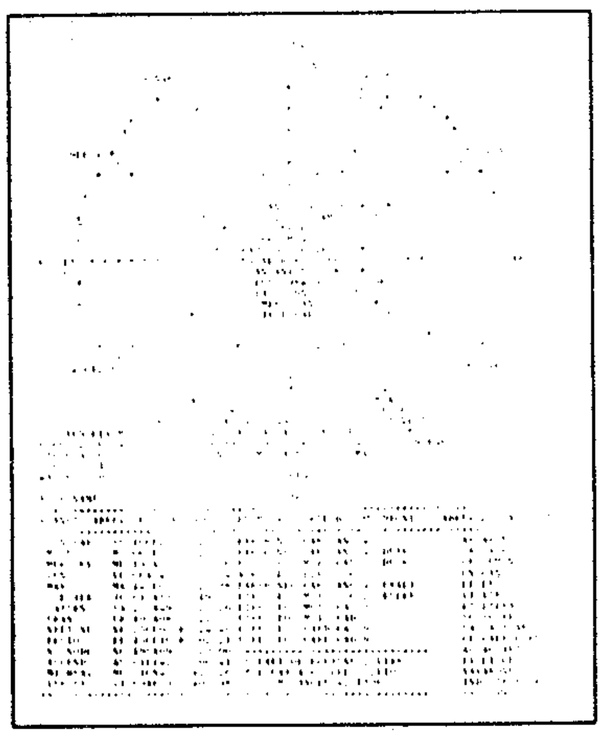

Astrology-Horoscope Maker is so easy to use, too. Just answer the questions in the menu and you'll have it. But, don't think this uncomplicated program is a mere game. It is written for the professional astrologer and student of astrology. And your charts may be saved on a diskette for future printing.

You will need a drive as this is only available on diskette. The program requires Extended Basic, 32K memory expansion and an 80 col. printer such as Epson 80 or Okidata 82A. Priced at only $49.95 it is real chart topper. When ordering, ask for catalog number EB-03.

## ESTABLISH ORDER

Our *Homework Helper* is a powerful organizational tool inside a cartridge. Just plug it in for a completely menu driven program that's easy to use and a big help with homework.

Your child can keep record of assignments. Or use the provided book report formats. Or generate problem worksheets. A practical applications way to teach or learn computer literacy.

Homework Helper is available in cartridge only, requires 32K memory expansion and at least one disk drive. And it is priced at only $39.95. When ordering, ask for AS-04.

VISA and MasterCard welcome. To order by phone, call (408) 866-8579. If ordering by mail, send Cashier's check or Money Order. (Personal checks take 10 days to clear.) C.O.D.'s add $5.00.

Please state items you are ordering, quantity and the price of each item. Allow 4 to 6 weeks delivery. Add 5% of total order for shipping and handling. CA residents add 6.5% sales tax.

For more information on other Navarone products request our catalog.

Dealer inquiries welcome.

NAVARONE

Navarone Industries, 510 Lawrence Expressway, #800, Sunnyvale, CA 94086

© 1983 Navarone Industries

ROMOX™

476 Vandell Way • Campbell • California • 95008 • 408-374-7200

Printed in U.S.A.

© 1984 Romox, Inc.